STRÖME

Air humidifier – Model: SPS-913C

User manual in English



CE

Contents

Safety	5
Parts	8
Technical information	11
How to use	12
Remote control battery	12
Place of use	12
Water and fragrance oil	13
General use	14
Settings	15
Maintenance, storage and recycling	17
Cleaning the water tank	17
Cleaning the filter	18
Cleaning the water bowl and safety switch	18
Cleaning the humidity and temperature sensor	18
Storage	18
Recycling	19

Safety

- Read the instructions and keep them for future reference. By following these safety instructions, you can use the appliance safely and prevent damage to the appliance or injury to persons.
- Before use, ensure that the package contains all parts listed in the technical specifications and that the appliance parts are intact. Do not use the appliance if any parts are missing or damaged.
- Do not attempt to repair the appliance parts yourself. Take the appliance to the retailer or an authorised service centre if any parts are faulty.
- Remove all protective plastics and stickers from the appliance.
- The appliance is designed for domestic use in rooms of around 20 to 30 square metres.
- The use of the appliance increases humidity, especially in the immediate vicinity of its place of use. For this reason, the appliance should not be used near objects or surfaces that are susceptible to damage by moisture. Such objects and materials include books, photographs and tapestries. Stop using the appliance immediately if it causes harmful levels of moisture in its operating environment.
- Use the appliance only in dry indoor environments at room temperature.
- Do not expose the appliance to water or other liquids.
- Do not expose the appliance to fire, direct sunlight, or other heat sources, excessive cold, or corrosive substances.
- Do not cover the appliance or its air outlet.
- Make sure that the power cord doesn't get damaged during installation. If the power cord gets damaged, contact your

retailer or an authorised service centre. Never use the appliance if its power cord is defective or damaged.

- Incorrect voltage will damage the appliance and may cause electric shock. Check the required voltage for the appliance on the product label. Use the appliance only in places where the required voltage is available.
- Do not connect the appliance to the electrical outlet until you have filled the water tank.
- Plug the appliance's power cord into an accessible socket.
- Place the appliance on a stable, level and dry surface at a sufficient distance (approx. > 50 cm) from walls and objects.
- Do not let the power cable hang over the edge of high surfaces during use or storage to avoid the appliance falling.
- Do not place the appliance or power cord in walkways where it could pose a tripping hazard.
- Do not install the appliance or power cord in a way that they will be pinched during use or storage.
- Do not wind the power cable around the appliance during use or storage.
- Do not use the appliance without water.
- Never leave the appliance unattended when in use.
- Disconnect the appliance's power cord from the socket after use. Never pull the power cord to disconnect it; always grip the plug.
- Clean the water tank at least every 72 hours to prevent accumulated microbial growth.
- The appliance can also be used by children over 8 years old and persons with physical or mental limitations, or persons without experience or knowledge of how to use the appliance, provided they have been instructed on its safe use or are under appropriate supervision and understand the risks associated with it. Children should not play with

the appliance. Children should not clean or maintain the appliance without supervision.

- The remote control of the appliance is powered by a single CR2025 battery.
- If a child or pet swallows a battery, it can cause serious injury or death. A swallowed battery can also cause severe internal burns within two hours. Always store batteries out of the reach of children and pets.
- If you suspect that a person or pet has swallowed a battery, or if a battery has entered any body cavity, seek immediate medical attention.
- Check the polarity markings on the battery case before installing the battery. Always follow the polarity markings.
- Do not short-circuit the battery.
- If the battery has leaked, remove the liquid that has leaked into the battery compartment and replace the battery with a new one.
- Do not attempt to recharge disposable batteries. Do not use rechargeable batteries or accumulators.
- Replace the battery every three months and whenever it is empty.
- Remove the battery when the appliance is not in regular use. Also remove the battery when storing the appliance.
- Remove the battery from the appliance before sending it for recycling.
- Always recycle used batteries. Never burn batteries, as this can cause an explosion and serious injury.
- Tape both poles of the battery before you send it for recycling to prevent short-circuiting.

Parts



Monitor

1. Temperature
2. Target humidity
3. Timer icon
4. Target humidity setting icon
5. Heating icon
6. Automatic setting icon
7. Ionization icon
8. Night mode icon
9. Empty water tank icon
10. Power level icons
11. Current humidity

Appliance

12. Water tank lid
13. Water tank
14. Power button
15. Timer button
16. Target humidity and night mode button
17. Ionization button
18. Power level button
19. Heating button

Remote control

20. Power button
21. Ionization button
22. Heating button
23. Timer button
24. Target humidity and night mode button
25. Power level button

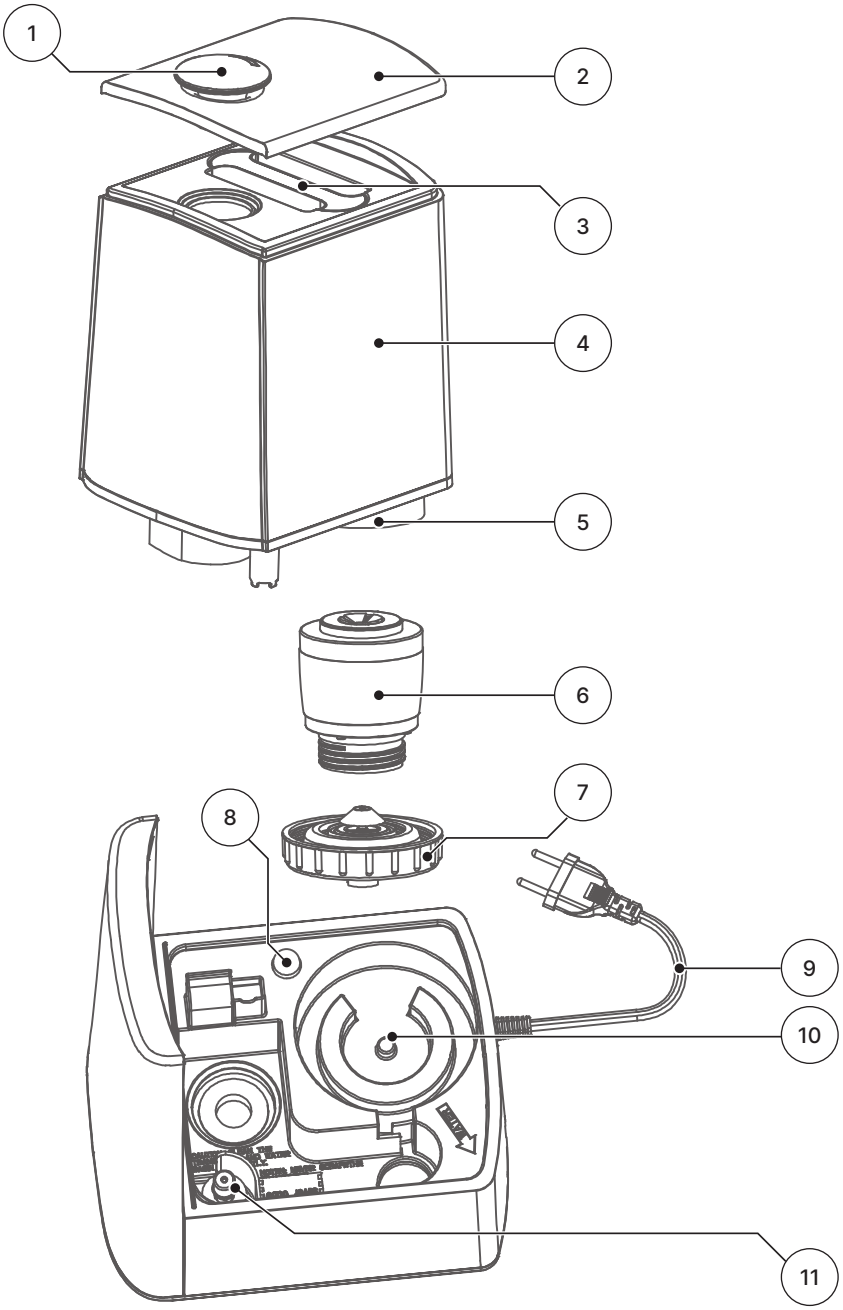
1
2
3
4
5
6
7
8
9
10
11

1. Steam outlet
2. Water tank lid
3. Handle
4. Water tank
5. Fragrance container
6. Filter
7. Water tank cap
8. Indicator light
9. Power cord
10. Water bowl
11. Safety switch

Technical information

Model	Ströme SPS-913C
Water tank capacity	5 l
Steam output	400 ml/h
Room size	20 to 30 m^2
Timer	1 to 12 hours
Automatic power off	Yes
Remote control battery	1 x CR2025
Dimensions	33 × 18 × 21 cm
Power cord length	150 cm
Voltage and power	220–240 V 50/60 Hz 110 W



How to use

Remote control battery

1. Open the battery compartment of the remote control.
2. Insert one CR2025 battery into the battery door with the negative terminal facing the remote control buttons.
3. Close the battery compartment.

Place of use

Choose a suitable place of use for the appliance. Make sure that

- The place of use complies with the safety instructions given in this user manual,
- It is easy for you to use the appliance and fill its water tank at the place of use,
- You have easy access to the electrical outlet where you plug the appliance's power cord.

Water and fragrance oil

Close the windows before use to ensure the appliance works as efficiently as possible.

1. Unplug the appliance from the power outlet before filling the water tank.
2. Lift the water tank lid off the appliance and remove the water tank.

- Clean the water tank before first use or if 72 hours or more have passed since the last cleaning.

3. There is an opening at the bottom of the water tank. Turn the cap counterclockwise and remove it.
4. Pour clean tap water or bottled drinking water into the tank. Please note that the tank capacity is 5 liters. Do not exceed the tank capacity.
5. Turn the cap clockwise until it is tight.
6. Place the water tank back into the appliance and close its lid.

- You can add fragrance oil to the appliance's fragrance container:

1. Push the fragrance container inwards. The container opens with a pop-up switch.
2. Add a few drops of fragrance oil to the container.
3. Push the fragrance container back into the appliance until it locks into place.

- Note! Never add fragrance oil to the water.

General use

1. Plug the appliance’s power cord into an accessible socket.

The appliance's power cord has a sensor that measures the temperature and humidity of the room air. Make sure there is free space around the sensor when you plug the power cord into the outlet.

2. Turn on the appliance by pressing the power button on the control panel or remote control. The appliance starts operating with the default automatic setting. If you want, you can manually adjust these appliance settings:

- Power level
- Heating
- Target humidity
- Ionization
- Water tank light
- Timer
- Night mode

Check the appliance settings in the table on the next page.

The appliance turns off automatically when the water tank is empty. Unplug the power cord from the outlet and fill the water tank before continuing to use the appliance.

Settings

Setting	Explanation
Power level	You can choose slow, medium or fast steam output. Press the button on the control panel or remote control to choose the power level.
Heating	The appliance produces warm steam instead of cold steam. The steam reaches maximum temperature after 10 to 15 minutes. Press the button on the control panel or remote control to turn the setting on and off.
Target humidity	You can set the target humidity between 30 and 75 percent. The appliance stops producing steam when the set humidity level is reached. Press the button on the control panel or remote control to turn the setting on and off.

Setting	Explanation
Ionization	The appliance releases negative ions into the air, which bind to air pollutants. The setting purifies the room air. Press the button on the control panel or remote control to turn the setting on and off.
Water tank light	Long press the button on the control panel or remote control to turn the light on or off.
Timer	The device stops operating after the set time. Press the button on the control panel or remote control to turn on the timer. Press the button again to confirm the setting. Scroll to CO to turn off the timer.
Night mode	The lighting and sound signals are off. Long press the button on the control panel or remote control to turn the light on or off.

Maintenance, storage and recycling

Clean the appliance regularly according to these instructions. Do not use sharp objects, metal cleaning tools, or abrasive cleaners.

Cleaning the water tank



- If you use the appliance at least every three days, clean the water tank at least every 72 hours to prevent accumulated microbial growth.
- If you do not use the appliance at least every three days, pour the water out of the water tank after use and dry it thoroughly.
- Clean the inside surfaces of the water tank with a soft cloth. If limescale deposits are not removed with water alone, you can use a mild cleaner. Rinse off detergent residues from the water tank thoroughly.
- Clean the exterior surfaces of the water tank, lid, and appliance with a dry, soft cloth. If dirt has accumulated on the exterior surfaces, you can clean them with a mild detergent. Do not expose the electrical parts of the appliance to water.

Cleaning the filter

1. Open the water tank cap and pull out the filter.
2. Clean the filter under running water.
3. Allow the filter to dry completely before reinstalling it.
4. Close the water tank cap with the filter in place.

Cleaning the water bowl and safety switch

Clean the water bowl and safety switch with a soft cloth. If there are deposits on the surfaces of the parts, you can use citric acid for cleaning. Finally, wipe the water bowl and the safety switch with a soft cloth dampened with clean water.

Cleaning the humidity and temperature sensor

Clean the humidity and temperature sensor with compressed air.

Storage

- Empty and dry the water tank before storing the appliance.
- Store the appliance in dry indoor environments at room temperature out of reach of children and pets.
- We recommend to store the appliance in its original package if you do not use it frequently.

Recycling

The device or its accessories must not be disposed of with regular household waste at the end of their life cycle. Take the device for recycling to the retailer or a local waste disposal facility responsible for recycling. For more information, contact your retailer or waste management company.



Verkkokauppa.com Oyj
Tyynenmerenkatu 11, 00220 Helsinki
https://asiakaspalvelu.verkkokauppa.com